Robert-Bosch-Str. 9
50769 Köln
Tel. 0221/970325-0
Fax 0221/970325-4
Email cctv@tamron.de
www.tamron.de

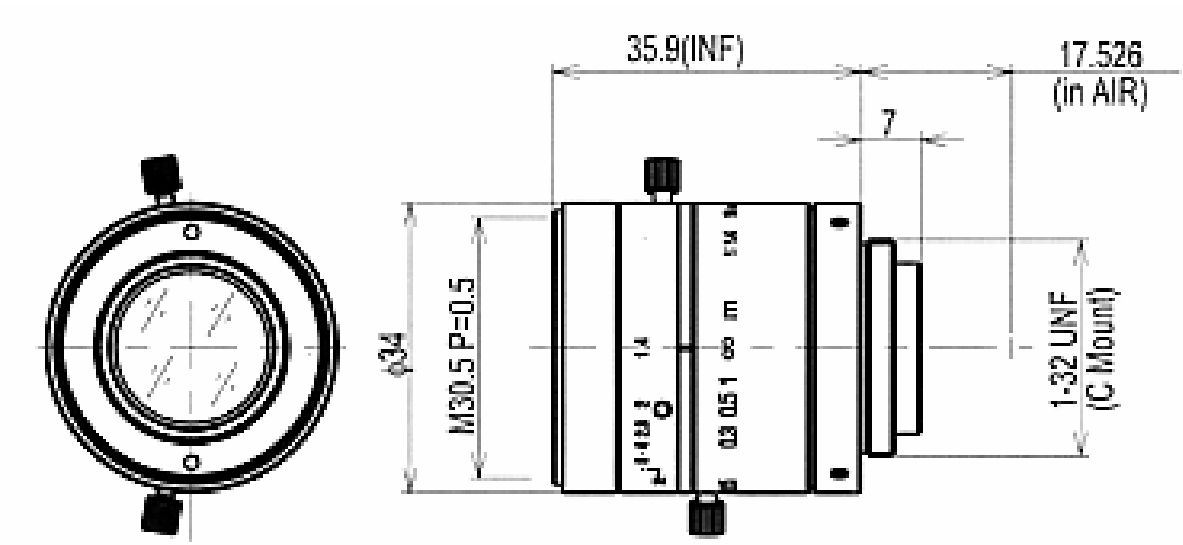

23FM16SP w/ Lock (2/3" 16mm F/1.4 C-Mount)